JCP UNIVERSE

NAIA
table mirror

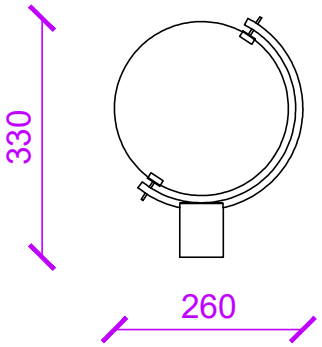

FRONT VIEW

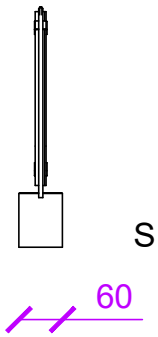

SIDE VIEW

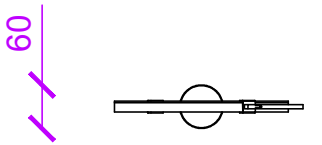

PLAN VIEW