JCP UNIVERSE

ABORAM
large vase

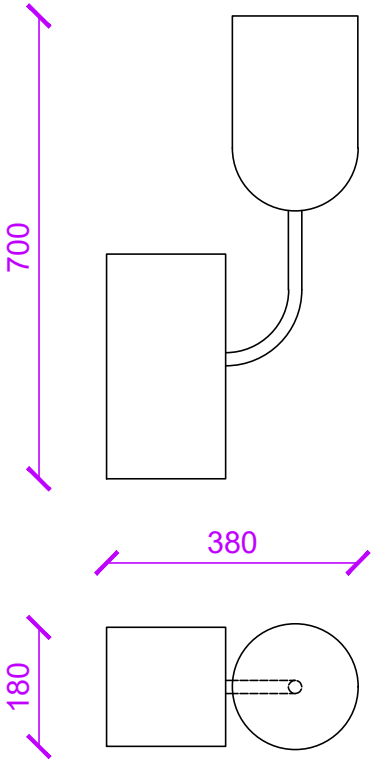

FRONT VIEW

PLAN VIEW

ABORAM
small vase

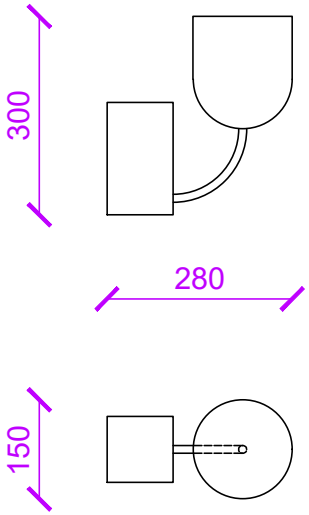

FRONT VIEW

PLAN VIEW