JCP UNIVERSE

SURANDE
side table / lamp

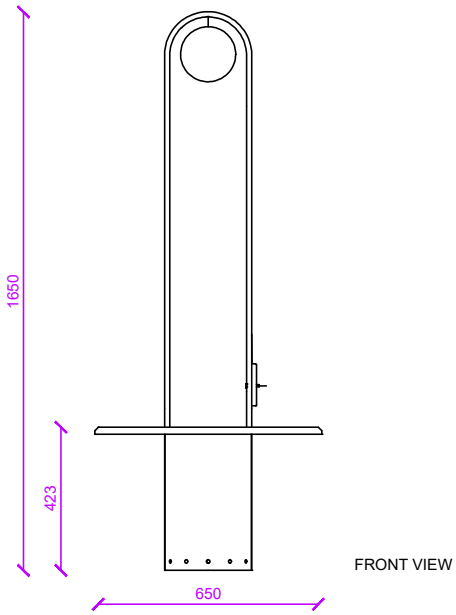

FRONT VIEW

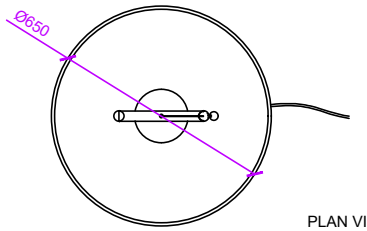

PLAN VIEW